MMS U.S. Department of the Interior
Minerals Management Service

Supplemental Official Lease Diagram

OCS Planning Area Name: Beaufort Sea
Leasing Map / OPD Name: Dease Inlet NR05-01
Lease No.:

☐ Feet
☒ Meters

Leasing Map/ OPD Number	Block No:
NR05-01	7112
NR05-01	7113

Datum: NAD 83/WGS 84
NADCON Version:
Projection Zone: UTM 05

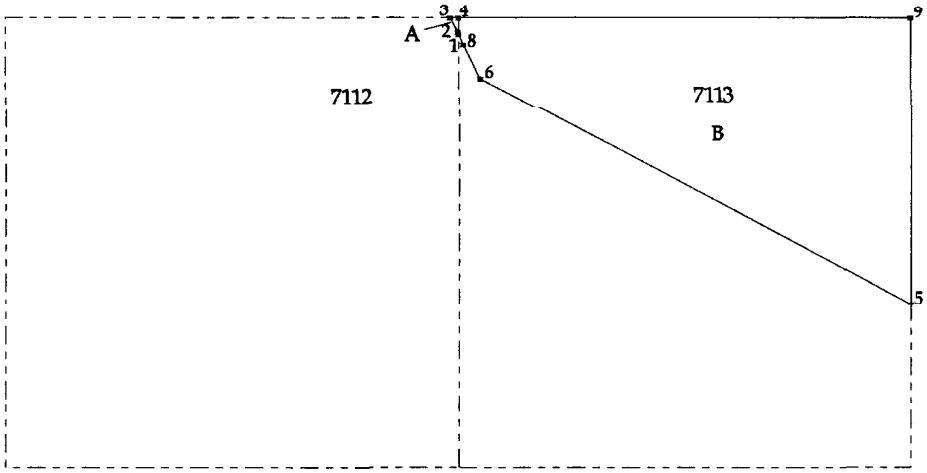

Federal 8(g) Area: A = 0.768534
B = 846.655569

Federal Non-8(g) Area:

Total Area: = 847.424103

Intersections
1 447200.000 7881424.363
2 447190.479 7881443.314
3 447112.574 7881600.000
4 447200.000 7881600.000

Arc Centers
6 to 8 442438.177 7878546.456

For the Director, MMS — Date 07/30/2003
For the OCS Region — Date 8/21/2003

MMS U.S. Department of the Interior
Minerals Management Service

Supplemental Official Lease Diagram

OCS Planning Area Name: Beaufort Sea
Leasing Map / OPD Name: Dease Inlet NR05-01
Lease No.:

Leasing Map/ OPD Number	Block No:
NR05-01	7112
NR05-01	7113

[ ] Feet
[X] Meters

Intersections
5 452000.000 7878559.155
6 447437.030 7880971.452
8 447252.753 7881319.360
9 452000.000 7881600.000

For the Director, MMS — Date 07/30/2003
For the OCS Region — Date 8/21/2003